5.057 Nashville Highway Special District

A. General Provisions

1. Purpose

The purpose of the Nashville Highway Special District is to implement the results of the Nashville Highway Concept Plan and Zoning Charrette and the Vision Lewisburg 2035 Plan.

2. Intent

It is the intent of the Nashville Highway Special District to:

a. Create a more attractive gateway into Lewisburg;

b. Preserve rural character of Nashville Highway by concentrating development at key intersections;

c. Ensure higher quality of development for new construction;

d. Ensure a higher quality streetscape through improved access, landscaping, and screening;

e. Promote a mixture of uses;

f. Provide a mixture of housing types; and

g. Create a more pedestrian-friendly Nashville Highway.

3. Applicability

a. Territorial Application

The Nashville Highway Special District applies to property located along Nashville Highway within the City limits, as shown in section C.1.

4. Transitional Provisions

a. Existing Development

Any existing use, lot, building or other structure legally established prior to the effective date of the Nashville Highway Special District that does not comply with any provision of these specific regulations is a legal non-conforming use pursuant to Article VI.

b. New Development

Except as provided elsewhere in this section, upon the effective date of the Nashville Highway Special District or any subsequent amendment, any new building or other new structure must be constructed or developed only in accordance with all applicable provisions of the Nashville Highway Special District. No excavation or filling of land or construction of any public or private improvements may take place or commence except in conformity with the Nashville Highway Spe-

cial District.

c. Additions

Except as provided elsewhere in this section, upon the effective date of the Nashville Highway Special District or any subsequent amendment, any addition to an existing building or buildings must be constructed or developed only in accordance with all applicable provisions of the Nashville Highway Special District if any of the following criteria are met:

i. The addition fronts a public right-of-way; or

ii. The gross floor area of the addition exceeds 25% of the gross floor area of the existing building or structure being modified.

Refer to Section C.2.b.ii. for additional requirements for additions.

d. Modifications

Except as provided elsewhere in this section, upon the effective date of the Nashville Highway Special District or any subsequent amendment, any modification to an existing element of a building or buildings must comply with the provisions of the Nashville Highway Special District if all of the following criteria area met:

i. The building element is regulated by the Nashville Highway Special District; and

ii. The proposed modification fronts a public right-of-way.

Only modifications that meet the above criteria are required to comply with the provisions of the Nashville Highway Special District. Modifications shall not force compliance of the whole building.

e. Repair and Maintenance

Routine repairs and maintenance of an exisitng building or site are permitted and are not required to comply with the provisions of the Nashville Highway Special District. If elements have deteriorated beyond the point where they can be retained, they shall be replaced in kind. Elements that are not replaced in kind shall be considered Modifications and are subject to Section A.4.d.

f. Changes of Use

Except as provided elsewhere in this section, upon the effective date of the Nashville Highway Special District or any subsequent amendment, any change of use within an existing building or structure must comply with the provisions of the C-2 zoning district with the exception that new signage must comply with the signage provisions of the Nashville Highway Special District.

g. Previously Issued Permits and Pending Applications

Previously issued permits and pending applications will be processed in accordance with and decided pursuant to the law existing on the date the application was filed.

5. Other Provisions of the Lewisburg Zoning Ordinance

Provisions of the Lewisburg Zoning Ordinance that are not varied by the provisions set forth in this section shall apply within the Nashville Highway Special District, whether or not such other provisions are specifically referenced in the Nashville Highway Special District. The lack of a cross-reference to other provisions of the Lewisburg Zoning Ordinance does not exempt a property, building, structure, or use from such provisions.

6. Conflicting Provisions

a. If there is a conflict between the provisions set forth in this section and any other City ordinance or regulation, the provisions of this section control.

b. The graphics in this section are for illustrative purposes only. Where there is a conflict between a graphic and the text, the text controls.

B. Administrative Procedures

1. Pre-Application Conference

A pre-application conference with City staff is required prior to any application for approval under the Nashville Highway Special District. The purpose of the pre-application conference is to provide an overview of the materials needed to submit an application and a description of the process; answer questions related to development within the Nashville Highway Special District; and determine and clarify issues that may arise. The Pre-Application conference shall occur at the biweekly Utility Board Meeting. Applicants should contact the Codes Department for application deadlines and submittal requirements.

2. Development Plan Required

Prior to the issuance of building permits, a Development Plan meeting the following requirements must be submitted and approved by the Planning Commission:

a. Final site plan prepared by a Tennessee licensed engineer or surveyor for the development to include the site boundary, topographic information, flood and other natural feature information, location of all buildings or other structures, interior streets, parking areas, open space, utilities, and all other features and facilities to be installed or used in connection with the proposed development. Applicable calculations that indicate compliance with the provisions of the Nashville

Highway Special District shall be included on the site plan in tabular format.

b. Detailed landscape plan to include the location and species of all plantings and the location and design of all fences and walls.

c. Elevations of all building facades that front a public right-of-way to include dimensions, materials, and applicable calculations in tabular format to indicate compliance with the provisions of the Nashville Highway Special District.

d. Signage Plan to include the location and design of all signage.

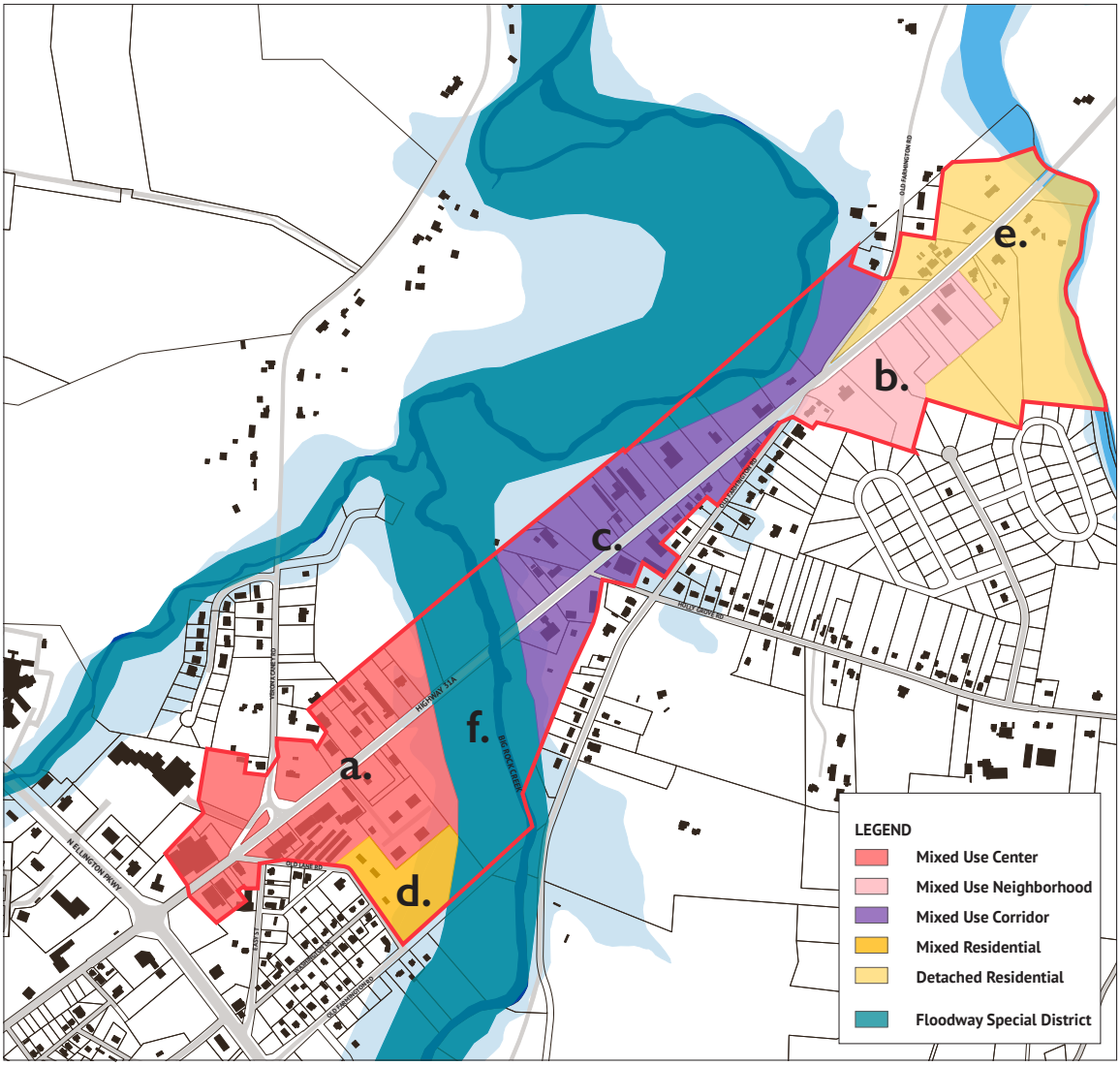

Figure 1: Nashville Highway Sub-District Map

C. Sub-District Standards

1. Sub-Districts Established

The following Nashville Highway sub-districts are established and are part of the Official Zoning Map and illustrated in Figure 1:

a. Mixed-Use Center (Mx-Ce)

b. Mixed-Use Neighborhood (Mx-N)

c. Mixed-Use Corridor (Mx-Co)

d. Mixed Residential (Mx-R)

e. Detached Residential (DR)

f. Floodway Special District (subject to the standards of the Floodway Special District in 5.054)

2. Standards Applicable to All Districts

a. Lot

i. Coverage does not include paved areas such as driveways; surface parking; uncovered porches, stoops, or patios; decks; and swimming pools.

b. Placement

i. Setbacks are measured at a right angle from the adjacent property line.

ii. Additions to buildings are not required to meet the minimum building frontage standards as applicable by sub-district.

c. Height

i. Height shall be measured in stories and feet. Measurement in feet shall be the vertical distance from the highest point of grade along the primary street building line to the bottom of the eave on a sloped roof or the highest point of the roof surface of a flat roof not including a parapet.

ii. Where a lot slopes down from the primary street builidng line a minimum of 10 feet vertically, one additional story is allowed beyond the maximum number of stories as applicable by sub-district.

iii. Non-occupiable roof elements such as spires, cupolas, water towers, and similar structures may exceed the maximum height requirements.

iv. Chimneys, flagpoles, skylights, parapets and similar structures may exceed the maximum height requirements by 6 feet.

v. Stairways to the roof; rooftop shade structures, elevator pent-

houses; and rooftop mechanical equipment may exceed the maximum height requirement by 10 feet.

d. Articulation/Transparency

i. Transparency shall be measured by dividing the area of windows and doors by the total area of a story.

ii. Attachments

1. Awnings/canopies shall have a minimum clear height above a sidewalk of 9 feet and a minimum depth of 6 feet. A modification to these standards may be approved by the City to fit an awning/canopy on an existing building. Awning/canopy encroachments into a public right-of-way shall be approved by the authority with ownership of the right-of-way. Awnings and canopies shall not be internally illuminated.

2. Balconies shall have a minimum clear height above a sidewalk of 9 feet and a minimum clear depth of 4 feet. Balconies shall not be fully enclosed.

3. Bay windows shall have visible support, either by extending the bay to grade with a foundation or transferring the projection back to the wall with beams, brackets, or brick corbeling.

4. Porches shall have a minimum clear depth of 6 feet excluding steps. Porches may not encroach into a public right-of-way. Porches shall not be fully enclosed.

5. Stoops shall have a minimum clear depth of 4 feet. Stoops may not encroach into a public right-of-way. Stoops shall not be fully enclosed.

e. Parking

i. Parking and loading requirements shall be according to Article IV of the Zoning Ordinance.

ii. Required parking, with the exception of required accessible spaces, may be located off-site, if located within 600 feet from the primary pedestrian entrance.

iii. The Planning Commission may approve a shared parking plan for a mixed-use project when uses are located near one another and have different peak parking demands and operating houses, based upon a favorable recommendation of a shared parking study.

iv. Surface parking lot lighting shall be appropriate in scale for both the pedestrian and the vehicle. Lighting that minimizes light trespass, pollution, and uplight shall be utilized.

v. No parking space shall be more than 90 feet from a tree. The ends of interior parking bays with a minimum of 12 spaces shall be bordered with landscape islands. The ends of perimeter parking bays shall be bordered by landscape peninsulas.

f. Signage

i. Billboards are prohibited.

ii. The following signs are exempt:

1. Signs required for legal notices and other official instruments;

2. Flags and insignias of governmental, religious, charitable or fraternal organizations with an area of less than 50 sf and mounted on a single pole;

3. Decorative flags and bunting as authorized by the Council for town-wide celebrations, commemorations or conventions;

4. Memorial signs, tablets or cornerstones, names of buildings and dates of erection when included as an integral part of the building and constructed of durable non-combustible material or cut into masonry surfaces;

5. Directional signs and symbols not exceeding 3 sf in area, used solely for the purpose of traffic or pedestrian direction and placed on the property to which the public is directed;

6. Holiday lights and decorations during customary holiday periods.

iii. The following temporary signs are permitted:

1. Signs for political purpose, which shall be removed within 14 days after an election;

2. Special event signs erected no sooner than 14 days before the event, and removed within 7 days after the event;

3. Signs to indicate the opening of a new business, change of use, or going out of business sale displayed within the first 60 days the occupancy is open or the

last 90 days before closing;

4. Signs announcing construction not exceeding 32 sf and 10 feet in height; and

5. Signs announcing real estate availability.

iv. Nonconforming Signs

1. An existing sign may remain exempt from full compliance with the provisions of the Nashville Highway Special District provided the sign is maintained in good condition at all times, and is not abandoned.

2. An existing sign shall be brought into compliance with the provisions of the Nashville Highway Special District, if at any time the sign is altered, repaired, restored or rebuilt to the extent that the cost exceeds fifty percent of the estimated replacement cost of the sign (in current dollar value). If the alteration or repair is caused by involuntary damage or casualty, this standard will not apply and the sign may be altered or repaired to any extent.

v. Any combination of awning, canopy, or wall signs shall be limited to two signs per tenant space on a primary street with one additional sign permitted on a secondary street.

vi. Awning Signs

1. Awning signs shall have a maximum height of 2 feet and a maximum area of 16 square feet.

2. Awning signs shall be limited to awnings above ground story windows and doors.

3. Awning signs shall not be internally illuminated.

vii. Canopy Signs

1. Canopy signs shall have a maximum height of 2 feet and a maximum area of 16 square feet.
2. Canopy signs shall not extend beyond the ends of the canopy.
3. Canopy signs shall be limited to one sign per canopy.
4. Canopy signs may be internally or externally illuminated.

viii. Ground-mounted Signs

1. Ground-mounted signs shall have a maximum height of 10 feet; a maximum depth of 2 feet; and a maximum area of 80 square feet. The base of a ground-mounted sign shall have a maximum height of 2 feet.
2. Ground-mounted signs shall be limited to one sign per lot frontage. One additional ground-mounted sign is allowed for lots 1000 feet wide and greater.
3. Ground-mounted signs shall set back a minimum of 5

feet from the primary or secondary street lot line and a minimum of 10 feet from all other lot lines.

4. Ground-mounted signs may be internally or externally illuminated.

ix. Projecting Signs

1. Projecting signs shall have a maximum height of 3 feet; a maximum projecting width of 4 feet; a maximum depth of 6 inches; and a maximum area of 9 square feet. A projecting sign shall have a minimum of 6 inches and a maximum of 12 inches of space between facade and sign.

2. Projecting signs shall be limited to one sign per tenant space.

3. Projecting signs shall be located between ground story window and door heads and second story window sills. In single story buildings, projecting signs shall not extend above roof eaves on a sloped roof or above the surface of a flat roof.

4. Projecting signs shall not be internally illuminated.

x. Wall Signs

1. Wall signs shall have a maximum depth of 1 foot and a maximum area of 32 square feet.
2. Wall signs shall not extend above roof eaves on a sloped roof or above the parapet on flat roofs.
3. Wall signs shall not cover windows or doors.
4. Wall signs may be internally or externally illuminated.

xi. Window Signs

1. Window signs shall be limited to ground story windows and doors.
2. Window signs shall not cover more than 20% of ground story windows and doors.

g. Architecture

i. Street-facing building facades shall be oriented parallel to the street frontage.

ii. Street-facing building facades shall only change primary materials along a horizontal line; at inside corners; or outside corners where they wrap the corner a minimum of 2 feet.

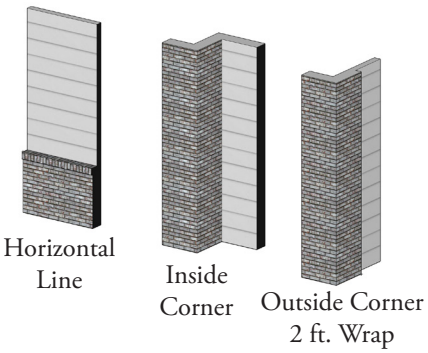

iii. With the exception of transoms and decorative windows, windows shall be square or vertically proportioned and rectangular in shape. Windows shall not be flush-mounted to the exterior of the facade on street-facing elevations. Brickmould is required for masonry wall applications.

iv. Window shutters are generally discouraged. If installed, shutters shall be sized and shaped to match their openings. Shutters shall be operable or have the appearance of operability including shutter hardware.

v. Building roofs shall be flat, hipped, or gabled. Flat roofs shall include a parapet on all street-facing elevations. The primary material for parapets shall match the material of its associated facade.

h. Landscaping/Screening

i. Mechanical equipment shall be placed on the roof; in the rear or side of buildings; or otherwise visually screened from the street. Mechanical equipment may encroach into the side and rear setbacks.

ii. Dumpster locations shall be screened on at least three sides from public view by an opaque impact-resistant fence or wall of sufficent height to screen the dumpster.

i. Miscellaneous

i. Drive-through facilities, included but not limited to stacking lanes, refuse storage, menu and ordering boards, and drive-up windows shall be located to the side or rear of the building. Drive-through facilities for food establishments shall provide a minimum of 4 queuing spaces. Drive-through facilities for financial institutions and pharmacies shall provide a minimum of 3 queuing spaces. Drive-through facilities for other uses shall be determined by the Codes Department.

3. Mixed Use Center (Mx-Ce)

a. Lot

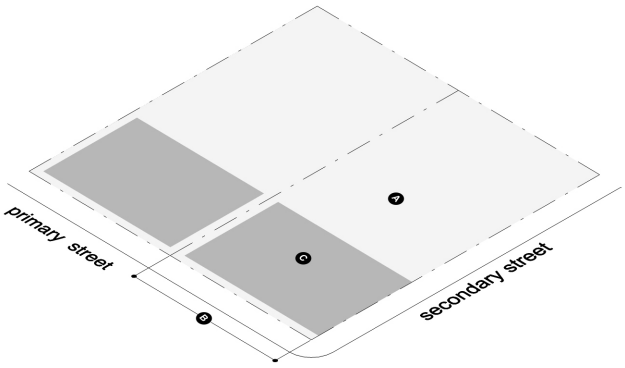

Lot Dimensions	
A Lot area (min.)	2000 sf
B Lot width (min.)	20’
Lot Parameters	
C Coverage (max.)	90%

b. Placement

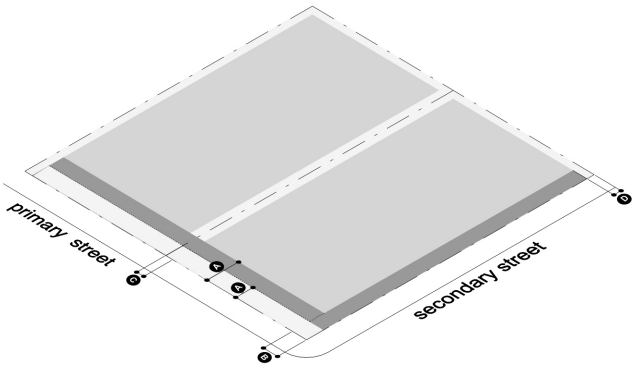

Building Setbacks	
A Primary street (min./max.)	12’/22’
B Secondary street (min./max.)	0’/10’
C Side (min.)	0’
D Rear (min.)	5’

Miscellaneous Standards

i. Building facades shall extend a minimum of 80% along the primary street frontage.

ii. Gas canopies shall not be permitted between a building facade and a street.

c. Height

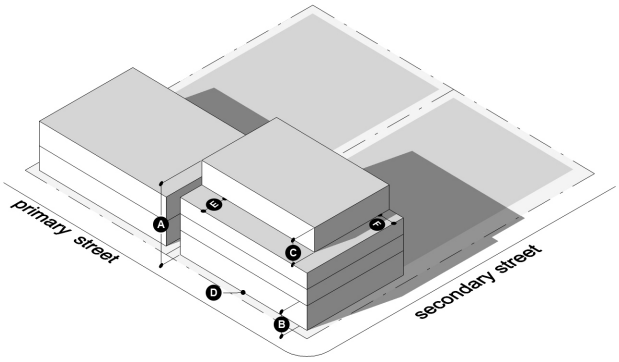

Building Height	
A Height, max. (stories/feet)	4/50’
Story/Foundation Height	
B Ground story height (min./max.)	15’/20’
C Upper story height (min./max.)	10’/15’
D Raised foundation (min.)	0’
Upper Story Setback	
E 4th story, primary street (min.)	10’
F 4th story, secondary street (min.)	10’

d. Articulation/Transparency

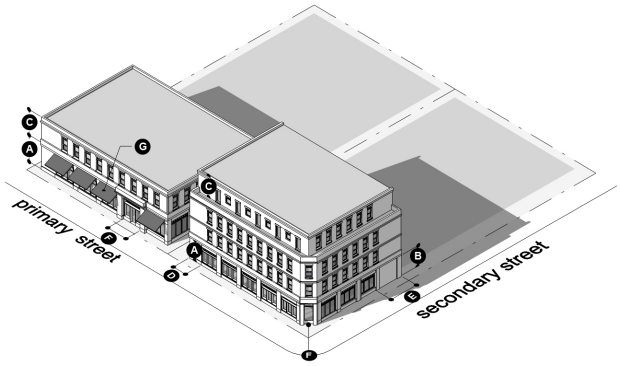

Transparency	
A Primary street first story (min.)	60%
B Secondary street first story (min.)	30%
C Upper story (min.)	20%
Articulation	
D Primary street blank wall (max.)	15’
E Secondary street blank wall (max.)	20’
F Entrance facing primary street required	
G Permitted attachments: Awning/canopy, balcony, bay window	

3. Mixed Use Center (Mx-Ce) (continued)

e. Parking

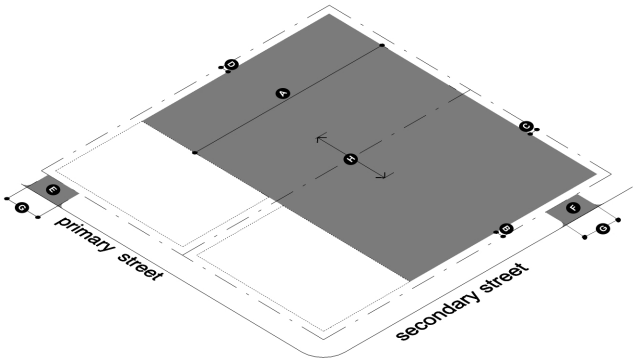

Parking Setbacks	
A Primary street Behind the principal building. Parking to the side shall be behind the principal facade and limited to one double loaded aisle of parking.	
B Secondary street (min.) Parking shall not be located between a building facade and an adjacent secondary street	5’
C Rear (min.)	5’
D Side (min.)	5’
Access	
E Primary street driveways (max.) Access shall be from a Secondary Street or alley where possible.	1
F Secondary street driveways (max.)	2
G Driveway width (max.)	24’
H Cross access between adjacent parking areas required	

f. Signage

i. Permitted Signs

Awning, Canopy, Gound-mounted, Projecting, Temporary, Wall, and Window

g. Architecture

i. Building facades that face a public street shall be clad in brick, stone, or cast stone. Stucco, wood siding and shingles; fiber-cement siding and shingles; smooth medium density overlay (MDO) panels, and pre-finished metal may be used as an accent material.

ii. Exposed foundations shall be concrete; decorative concrete block; or clad with brick, stone, or cast stone.

iii. Trim shall be wood, fiber-cement, or decorative urethane millwork. Decorative headers and sills in masonry-clad walls shall be masonry, cast stone, heavy timber, or steel.

iv. Windows and doors shall have clear glazing with low-E coating.

v. Window muntins, if installed, shall be true divided lites or simulated divided lites on both sides of the window. Snap-in muntins are prohibited. Panes shall be square or vertically proportioned.

h. Landscaping/Screening

i. A street yard landscape buffer is required along the primary street frontage. The buffer shall have a minimum width of 12 feet. The buffer should be designed to create a comfortable environment for pedestrians, providing shade from the sun and protection from the street.

Street trees should be formally planted in a straight line, between the edge of the right-of-way and the face of the building. Each 100 lineal feet of buffer shall include the following: 3 shade trees (equally spaced 30 feet on center within planters or grates); and Sidewalk 12' minimum in width (except for tree planter or grate locations). Driveways and pedestrian access points shall be excluded from the calculation of lineal feet of street yard landscape buffer.

ii. Surface parking lots with five or more parking spaces and located within 40 feet of a street shall be screened. Parking lot screening shall have a minimum height of 3 feet and a maximum height of 4 feet above adjacent grade. Screening shall at a minimum consist of a compact hedge of evergreen shrubs spaced to ensure enclosure into a solid hedge at maturity; an architecturally compatible opaque wall or fence, or a combination of both.

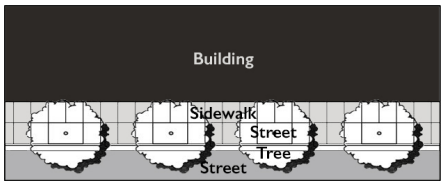

iii. At a minimum, pedestrian amenities shall be required based on the following scale of development:

up to 5,000 sf	1 pedestrian amenity
5,001-10,000 sf	2 pedestrian amenities
10,001-50,000 sf	3 pedestrian amenities
50,001+ sf	4 pedestrian amenities

Pedestrian amenities may include street furniture; low walls with seating or planters atop; courtyards or pocket parks (300 sf. min.); awnings; and public art.

i. Land Use

i. All land use categories listed in Section 5.060 are permitted with exception of the following:

Animal Care; Automotive Service and Repair; Farm, Garden, and Lawn Services; Contract Construction Services; Vehicular, Marine Craft, Aircraft and Related Equipment Sales, Rental, and Delivery; Warehousing, Goods Transport and Storage; Industrial; Agricultural Services; Mining and Quarrying; and Plant and Forest Nurseries.

ii. Specific land uses that are prohibited include the following:

Mobile Home, Single-family Detached; Airports; City Shop Garage; County Road Dept. Garage; Electrical Producing Facilities; Gas Producing Facilities; Jails, Detention or Correction Facilities; State Highway Garage; Telephone Switching Facilities; Water/Sewer Plants; Football, Baseball, etc. Fields; Golf Courses; Passive Parks; Auto Parking Lots; Lawnmower Repair Shops; Welding Shops; Adult Oriented Establishment; Motion Picture Theaters (Drive-In); Riding Stables; Cable TV/Radio and TV Receiving and Transmitting Station; Vehicular and Equipment Rental and Leasing Services; Commercial Sports Arenas and Playing Fields; Race Tracks; Sporting Recreational Vehicular Camps; and Farm Products and Raw Materials.

j. Other Standards

Refer to Section C.2. for additional standards applicable to all sub-districts.

4. Mixed Use Neighborhood (Mx-N)

a. Lot

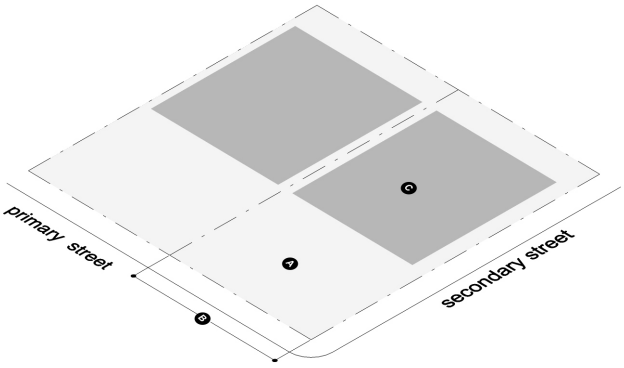

Lot Dimensions	
A Lot area (min.)	2,000 sf
B Lot width (min.)	20’
Lot Parameters	
C Coverage (max.)	80%

b. Placement

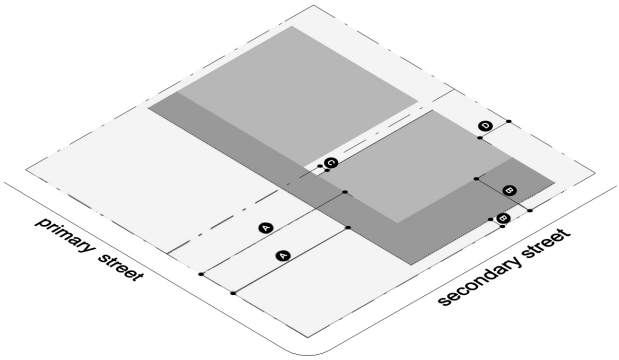

Building Setbacks	
A Primary street (min./max.)	70’/90’
B Secondary street (min.)	5’
C Side (min.)	5’
D Rear (min.)	20’

Miscellaneous Standards

i. Building facades shall extend a minimum of 40% along the primary street frontage.

ii. All development shall provide internal pedestrian ways to connect the primary entrances of all new buildings. There shall be at least one pedestrian way that connects the internal pedestrian network to existing or planned sidewalks in the adjacent public right-of-way.

iii. Gas canopies shall not be permitted between a building facade and a street.

c. Height

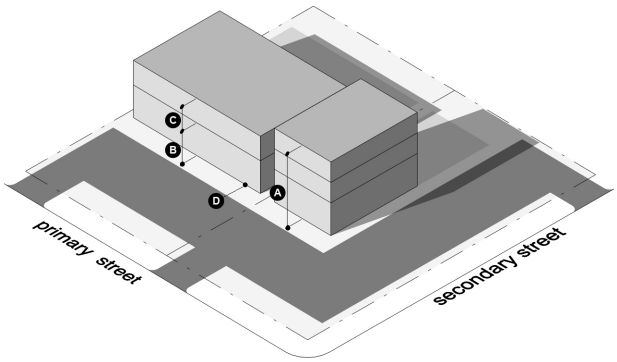

Building Height	
A Height, max. (stories/feet)	3/45’
Story/Foundation Height	
B Ground story height (min./max.)	15’/20’
C Upper story height (min./max.)	10’/15’
D Raised foundation (min.)	0’

d. Articulation/Transparency

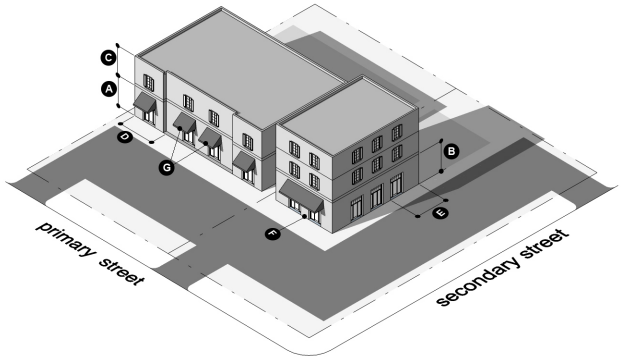

Transparency	
A Primary street first story (min.)	
Non-residential uses	60%
Residential uses	30%
B Secondary street first story (min.)	15%
C Upper story (min.)	15%
Articulation	
D Primary street blank wall (max.)	15’
E Secondary street blank wall (max.)	40’
F Entrance facing primary street required	
G Permitted attachments	
Awning/canopy, balcony, bay window	

4. Mixed Use Neighborhood (Mx-N) (continued)

e. Parking

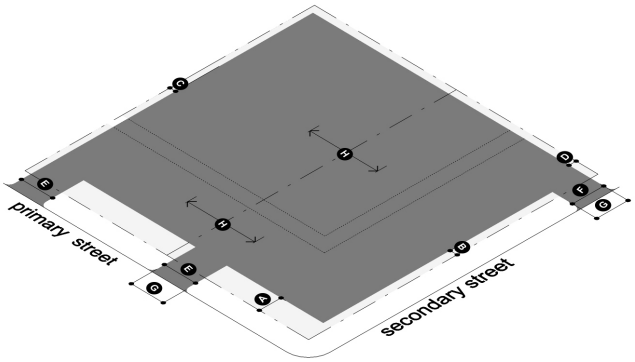

Parking Setbacks	
A Primary street (min.)	15’
B Secondary street (min.) Parking between a building and adjacent street is limited to one double-loaded aisle. See Section 4.h.i. for required street yard landscape buffer.	5’
C Side (min.)	5’
D Rear (min.)	5’
Access	
E Primary street driveways (max.)	1
F Secondary street driveways (max.)	2
G Driveway width (max.)	24’
H Cross access between adjacent parking areas required	

f. Signage

i. Permitted Signs

Awning
Canopy
Gound-mounted
Projecting
Temporary
Wall
Window

g. Architecture

i. Building facades that face a public street shall be clad in brick, stone, or cast stone; wood or fiber-cement siding; or stucco. Smooth medium density overlay (MDO) panels and pre-finished metal panels may be used as an accent material.

ii. Exposed foundations shall be concrete; decorative concrete block; or clad with brick, stone, or cast stone.

iii. Trim shall be wood, fiber-cement, or decorative urethane millwork. Decorative headers and sills in masonry-clad walls shall be masonry, cast stone, heavy timber, or steel.

iv. Windows and doors shall have clear glazing with low-E coating.

v. Window muntins, if installed, shall be true divided lites or simulated divided lites on both sides of the window. Snap-in muntins are prohibited. Panes shall be square or vertically proportioned.

h. Landscaping/Screening

i. A street yard landscape buffer is required along the primary street frontage. The buffer shall have a minimum width of 15 feet. The

buffer should be designed to blend in with the natural vegetation of undeveloped areas of Lewisburg. Straight lines and geometric shapes should be avoided. Plants should be organized in an irregular, asymmetric manner. Each 100 lineal feet of buffer shall include the following: 3 shade trees; 6 large evergreen shrubs or 6 small evergreen trees; and 12 small to medium evergreen shrubs.

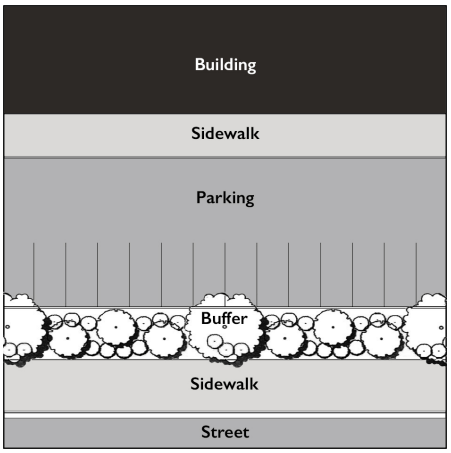

ii. Driveways and pedestrian access points shall be excluded from the calculation of lineal feet of street yard landscape buffer.

iii. Surface parking lots with five or more parking spaces and located within 40 feet of a secondary street shall be screened. Parking lot screening shall have a minimum height of 3 feet and a maximum height of 4 feet above adjacent grade. Screening shall at a minimum consist of a compact hedge of evergreen shrubs spaced to ensure enclosure into a solid hedge at maturity; an architecturally compatible opaque wall or fence, or a combination of both.

i. Land Use

i. All land use categories listed in Section 5.060 are permitted with exception of the following:

Animal Care; Automotive Service and Repair; Contract Construction Services; Vehicular, Marine Craft, Aircraft and Related Equipment Sales, Rental, and Delivery; Warehousing, Goods Transport and Storage; Industrial; Agricultural Services; Mining and Quarrying; and Plant and Forest Nurseries.

ii. Specific land uses that are prohibited include the following:

Mobile Home, Single-family Detached; Airports; City Shop Garage; County Road Dept. Garage; Electrical Producing Facilities; Gas Producing Facilities; Jails, Detention or Correction Facilities; State Highway Garage; Telephone Switching Facilities; Water/Sewer Plants; Football, Baseball, etc. Fields; Golf Courses; Passive Parks; Auto Parking Lots; Lawnmower Repair Shops; Welding Shops; Adult Oriented Establishment; Motion Picture Theaters (Drive-In); Riding Stables; Cable TV/Radio and TV Receiving and Transmitting Station; Vehicular and Equipment Rental and Leasing Services; Commercial Sports Arenas and Playing Fields; Race Tracks; Sporting Recreational Vehicular Camps; and Farm Products and Raw Materials.

j. Other Standards

Refer to Section C.2. for additional standards applicable to all sub-districts.

5. Mixed Use Corridor (Mx-Co)

a. Lot

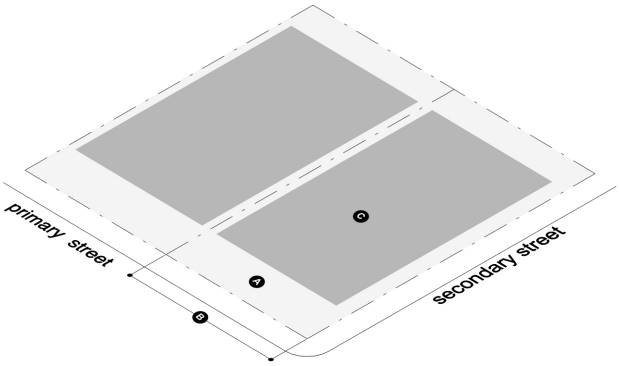

Lot Dimensions	
A Lot area (min.)	5,000 sf
B Lot width (min.)	50’
Lot Parameters	
C Coverage (max.)	80%

b. Placement

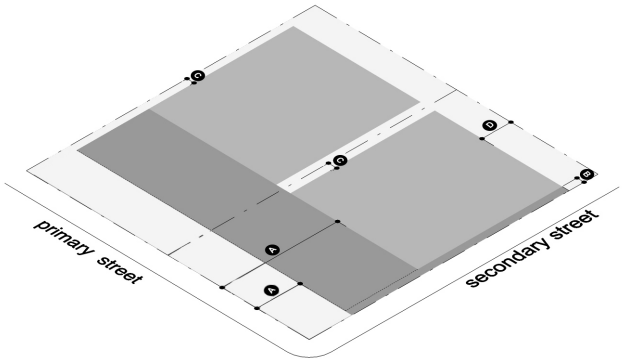

Building Setbacks	
A Primary street (min./max.)	30’/100’
B Secondary street (min.)	10’
C Side (min.)	5’
D Rear (min.)	20’

Miscellaneous Standards

i. Building facades shall extend a minimum of 40% along the primary street frontage.

c. Height

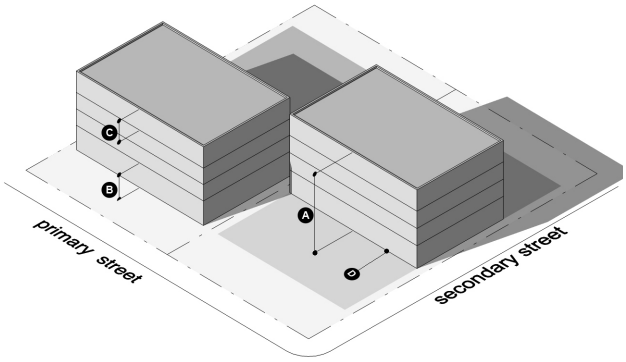

Building Height	
A Height, max. (stories/feet)	4/50’
Story/Foundation Height	
B Ground story height (min.)	10’
C Upper story height (min./max.)	10’/15’
D Raised foundation (min.)	0’

d. Articulation/Transparency

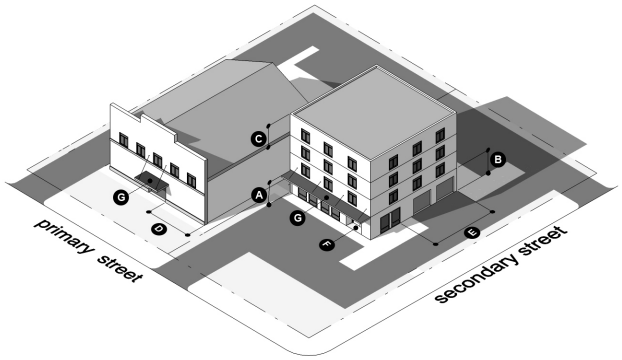

Transparency	
A Primary street first story (min.)	no req.
B Secondary street first story (min.)	no req.
C Upper story (min.)	no req.
Articulation	
D Primary street blank wall (max.)	30’
E Secondary street blank wall (max.)	60’
F Entrance facing primary street required	
G Permitted attachments	
Awning/canopy, balcony, bay window	

5. Mixed Use Corridor (Mx-Co) (continued)

e. Parking

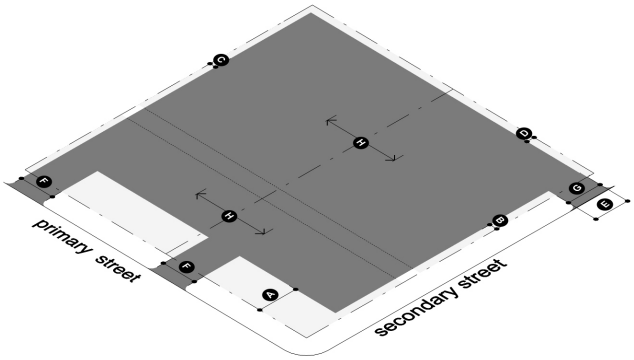

Parking Setbacks	
A Primary street (min.)	25’
B Secondary street (min.)	5’
Parking between a building and an adjacent street is limited to one double-loaded aisle. See Section 4.h.i. for required street yard landscape buffer.	
C Side (min.)	5’
D Rear (min.)	5’
Access	
E Primary street driveways (max.)	1
F Secondary street driveways (max.)	2
G Driveway width (max.)	24’
H Cross access between adjacent parking areas required	

f. Signage

i. Permitted Signs

Awning
Canopy
Gound-mounted
Projecting
Temporary
Wall
Window

g. Architecture

i. Building facades that face a public street shall be concrete; decorative concrete block; and/or clad in brick, stone, or cast stone; wood or fiber-cement siding; or stucco. Smooth medium density overlay (MDO) panels and pre-finished metal panels may be used as an accent material.

ii. Windows and doors with glazing shall have clear glazing with low-E coating.

h. Landscaping/Screening

i. A street yard landscape buffer is required along the primary street frontage. The buffer shall have a minimum width of 25 feet. The buffer should be designed to blend in with the natural vegetation of undeveloped areas of Lewisburg. Straight lines and geometric shapes should be avoided. Plants should be organized in an irregular, asymmetric manner. Each 100 lineal feet of buffer shall include the following: 3 shade trees; 6 large evergreen shrubs; 6 small evergreen trees; 12 small to medium evergreen shrubs

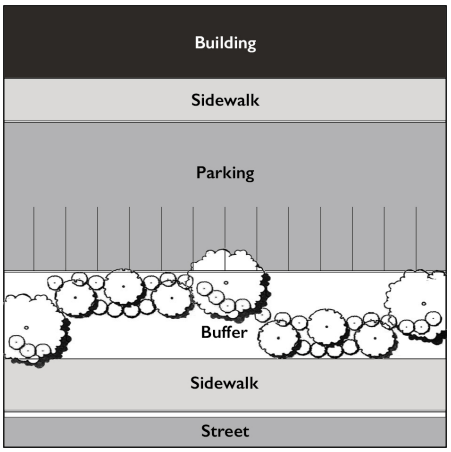

ii. Driveways and pedestrian access points shall be excluded from the calculation of lineal feet of street yard landscape buffer.

iii. Surface parking lots with five or more parking spaces and located within 40 feet of a secondary street shall be screened. Parking lot screening shall have a minimum height of 3 feet and a maximum height of 4 feet above adjacent grade. Screening shall at a minimum consist of a compact hedge of evergreen shrubs spaced to ensure enclosure into a solid hedge at maturity; an architecturally compatible opaque wall or fence, or a combination of both.

i. Land Use

i. All land use categories listed in Section 5.060 are permitted with exception of the following:

Residential; Industrial; Agricultural Services; and Mining and Quarrying.

ii. Specific land uses that are prohibited include the following:

Airports; Electrical Producing Facilities; Gas Producing Facilities; Jails, Detention or Correction Facilities; Telephone Switching Facilities; Water/Sewer Plants; Bus Maintenance and Large Truck Repair Shops; Adult Oriented Establishment; Motion Picture Theaters (Drive-In); and Riding Stables.

j. Other Standards

Refer to Section C.2. for additional standards applicable to all sub-districts.

6. Mixed Residential (Mx-R)

a. Lot

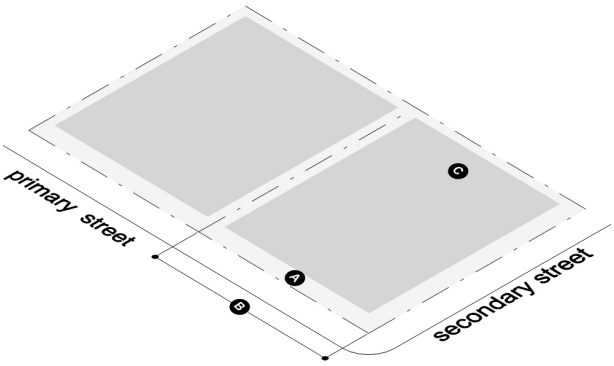

Lot Dimensions	
A Lot area (min.)	2,000 sf
B Lot width (min.)	20’
Lot Parameters	
C Coverage (max.)	85%

b. Placement

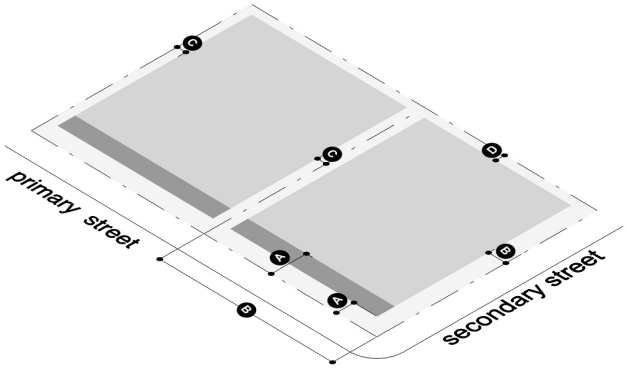

Building Setbacks	
A Primary street (min./max.)	10’/20’
B Secondary street (min.)	10’
C Side (min.)	0’
D Rear (min.)	5’

c. Height

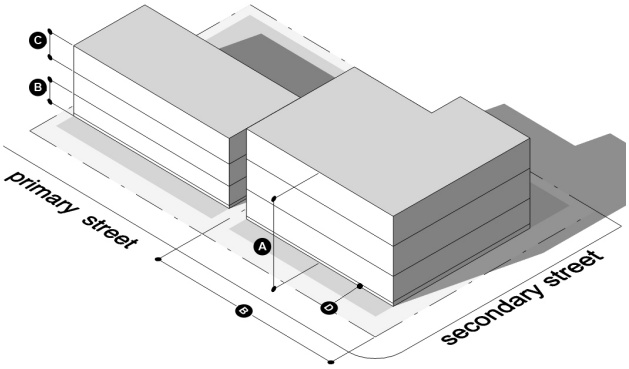

Building Height	
A Height, max. (stories/feet)	3/45’
Story/Foundation Height	
B Ground story height (min./max.)	10’/15’
C Upper story height (min./max.)	10’/15’
D Raised foundation (min.)	1.5’

d. Articulation/Transparency

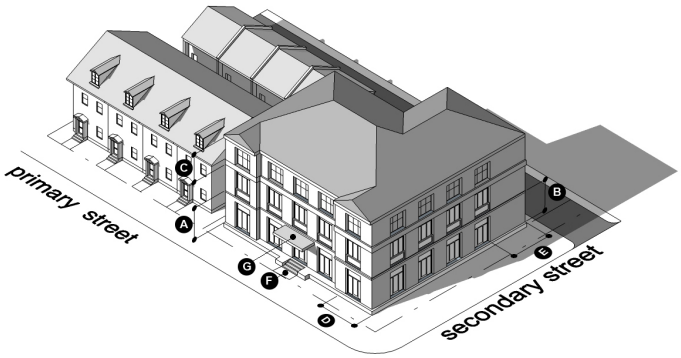

Transparency	
A Primary street (min.)	30%
B Secondary street (min.)	15%
Articulation	
D Primary street blank wall (max.)	15’
E Secondary street blank wall (max.)	30’

F Entrance facing primary street required

G Permitted attachments:

Awning/canopy, porch, stoop, balcony, bay window

6. Mixed Residential (Mx-R) (continued)

e. Parking

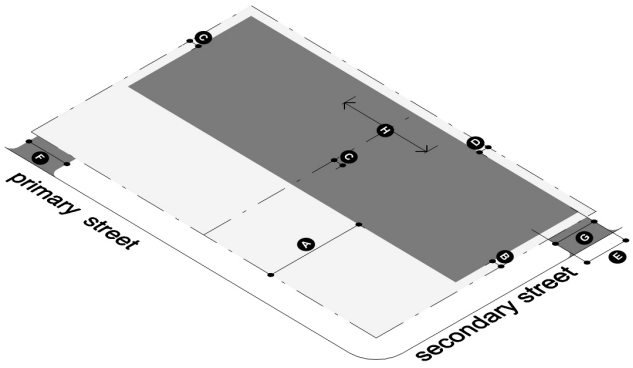

Parking Setbacks	
A Primary street (min.) Behind the principal building. Parking to the side shall be behind the principal facade and limited to one double loaded aisle of parking.	
B Secondary street (min.) Parking shall not be located between a building facade and an adjacent secondary street	5’
C Side (min.)	5’
D Rear (min.)	5’
Access	
E Primary street driveways (max.)	1
F Secondary street driveways (max.)	2
G Driveway width (max.)	24’
H Cross access between adjacent parking areas required	

f. Signage

i. Permitted Signs

Awning
Canopy
Gound-mounted
Projecting
Temporary

g. Architecture

i. Building facades that face a public street shall be clad in brick, stone, or cast stone. Stucco, wood siding and shingles; fiber-cement siding and shingles; smooth medium density overlay (MDO) panels, and pre-finished metal may be used as an accent material.

ii. Exposed foundations shall be concrete; decorative concrete block; or clad with brick, stone, or cast stone.

iii. Trim shall be wood, fiber-cement, or decorative urethane millwork. Decorative headers and sills in masonry-clad walls shall be masonry, cast stone, heavy timber, or steel.

iv. Windows and doors shall have clear glazing with low-E coating.

v. Window muntins, if installed, shall be true divided lites or simulated divided lites on both sides of the window. Snap-in muntins are prohibited. Panes shall be square or vertically proportioned.

h. Landscaping/Screening

i. Surface parking lots with five or more parking spaces and located within 40 feet of a street shall be screened. Parking lot screening shall have a minimum height of 3 feet and

a maximum height of 4 feet above adjacent grade. Screening shall at a minimum consist of a compact hedge of evergreen shrubs spaced to ensure enclosure into a solid hedge at maturity; an architecturally compatible opaque wall or fence, or a combination of both.

ii. Building facades that face a street shall include landscaping at the base of buildings to include: a single row of evergreen foundation shrubs; evergreen or deciduous accent shrubs at walkways and/or entries; and large shrubs or small understory trees at corners and building nooks to provide increased privacy between units.

i. Land Use

i. Land uses from the Residential land use category as established in Section 5.060 are permitted with the exception of the following:

Mobile Home and Single-Family Detached

j. Other Standards

Refer to Section C.2. for additional standards applicable to all sub-districts.

7. Detached Residential (DR)

a. Lot

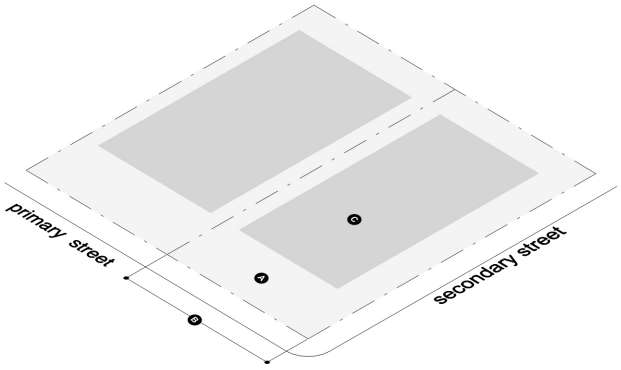

Lot Dimensions	
A Lot area (min.)	7,500 sf
B Lot width (min.)	50’
Lot Parameters	
C Coverage (max.)	50%

b. Placement

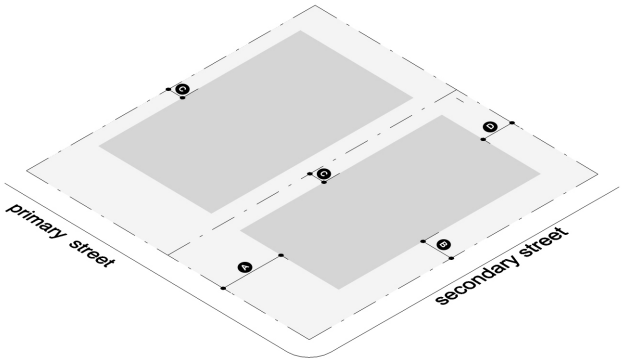

Building Setbacks	
A Primary street (min.)	40’
B Secondary street (min.)	20’
C Side (min.)	10’
D Rear (min.)	20’

c. Height

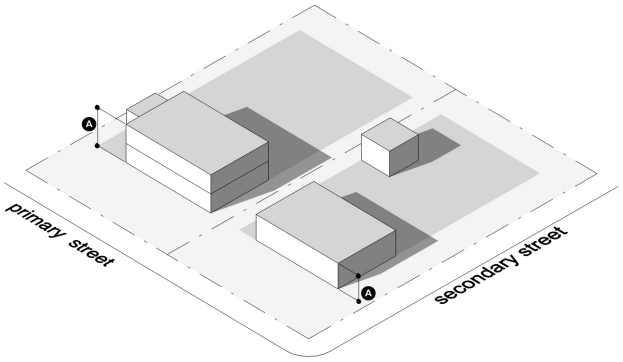

Building Height	
A Height, max. (stories/feet)	3/35’

d. Articulation/Transparency

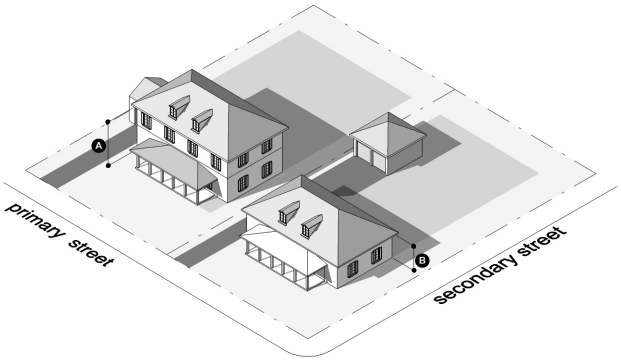

Transparency	
A Primary street (min.)	no req.
B Secondary street (min.)	no req.

Articulation
F Entrance facing primary street required
G Permitted attachments
Bay window, porch, stoop

3. Detached Residential (DR) (continued)

e. Parking

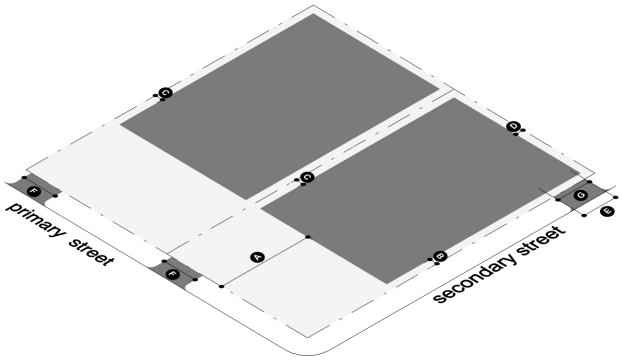

Parking Setbacks	
A Primary street (min.)	
Behind the principal facade	
B Secondary street (min.)	5’
C Side (min.)	5’
D Rear (min.)	5’
Access	
E Primary street driveways (max.)	2
F Secondary street driveways (max.)	1
G Driveway width (max.)	12’

f. Signage

i. Permitted Signs

Temporary

g. Architecture

i. Building facades that face a public street shall be clad in brick, stone, or cast stone; wood or fiber-cement siding; or stucco. Smooth medium density overlay (MDO) panels may be used as an accent material.

h. Landscaping/Screening

i. Reserved

i. Land Use

i. Land uses from the Residential land use category as established in Section 5.060 are permitted with the exception of the following:

Boarding Homes; Mobile Home; Multi-Family (2 and 3 Families); and Multi-Family (4 or more Families)

j. Other Standards

Refer to Section C.2. for additional standards applicable to all sub-districts.

D. Definitions

The following words, terms, and phrases are supplements to the definitions in Section 2.020 and are hereby defined as follows and interpreted as such throughout the Nashville Highway Special District.

Balcony: A covered or uncovered, occupiable platform attached to a building facade.

Bay Window: A space with windows that projects outward from a builidng facade and forms a recess within.

Blank Wall: The portion of a building facade that does not include windows or doors; recesses or projections six inches or greater; or a change in material.

Encroachment: A portion of a building or element attached to a building that is permitted to extend into a required setback.

Entrance: An opening intended for the entry or exit of pedestrians in a building.

Facade: The face of a building.

Height, Ground Story: A building story that is located at street level measured from finished floor to the finished floor of the level above.

Height, Upper Story: A building story located above the ground story that is measured finished floor to the finished floor of the level above.

Opening: A window or door within a building facade.

Porch: A covered, occupiable platform attached to a building facade near grade level.

Raised Foundation: The distance the finished floor of the ground story is elevated above the average elevation of grade along the primary street building line.

Roof: The structure forming the upper covering of a building including parapet walls.

Sign, Awning: A sign where graphics or letters are directly applied the awning surface and are an integral part of the awning.

Sign, Canopy: A sign where graphics or letters are attached to a canopy.

Sign, Ground-mounted: A sign wholly independent of a building facadethat is attached to the ground along its length or by posts at each end.

Sign, Projecting: A sign attached and perpendicular to a building facade that projects more than one foot from the building facade it is attached to.

Sign, Wall: A sign applied to or attached to a building facade that projects no more than one foot from the building facade it is attached to.

Sign, Window: A sign affixed to the inside of a window or door intended to be visible from through the window or door it is affixed to.

Stoop: A covered platform attached to a building facade near a building entrance.

Street, Primary: The fronting street of a lot; or when a lot fronts more than one

street, the street with the wider right-of-way or that which carries the greater volume of traffic.

Street, Seconday: Where a lot fronts more than one street, the street that has the narrower right-of-way or carries the lesser volume of traffic.